Study and Realization of Software Defined Radio Detection using Emona Sigex and Lab View platform for Cognitive radio Applications

Rogina Sultana[#1], Jayanta Kumar Ray[#2,] Sain Shaikh[#1], Quazi Md. Alfred[#1]
[#1] *ECE Department,AliahUniversity,New Town,Kolkata- 700160, India*

[#2]*ECE Department, Sikkim Manipal Institute of Technology, Sikkim Manipal University, Sikkim 737136, India*

Abstract

Software-Defined Radio (SDR) is a rapidly evolving technology that is receiving enormous recognition and generating widespread interest in the telecommunication industry. Over the last few years, analog radio systems are being replaced by digital radio systems for various radio applications in military, civilian and commercial spaces. In addition to this, programmable hardware modules are increasingly being used in digital radio systems at different functional levels. SDR technology aims to take advantage of these programmable hardware modules to build an open-architecture based radio system software.

This paper aims to emulate SDR receiver using NI Elvis and Emona Sigex signal Processing board operating under Lab View platform. In this work, multiple carrier signal have been received and message signal is demodulated by DSP based processing e.g tuning and A/D , D/A , tuning, filtering etc.

Index Terms —SDR, DSP, IIR filter, NI-Elvis, NI-Emona - sigex(key words)

1. Introduction

With the latest advances in computing technologies, digital signal processing and digital communication algorithms, artificial intelligence, radio frequency (RF) hardware design, networking topologies, and many other elements have evolved modern communication systems into complex, intelligent, high-performance platforms that can adapt to operational environments and deliver large amounts of information in real-time, error-free. The latest step in communication systems technology is the software-defined radio, or SDR, which adopts the most recent advances in all fields to yield the ultimate transmitter and receiver.

Software-Defined Radio (SDR) refers to the technology wherein software modules running on a generic hardware platform consisting of DSPs and general purpose microprocessors are used to implement radio functions such as generation of transmitted signal (modulation) at transmitter and tuning/detection of received radio signal (demodulation) at receiver. Figure 1 shows the schematic diagram for Software Defined Radio receiver. As shown by the figure, an antenna receives the radiowave as carrier signals. The whole carrier cum information signal is A/D converted and passed to the digital signal processing block. IIR filtering in this subsystem subsequently selects the desired carrier.

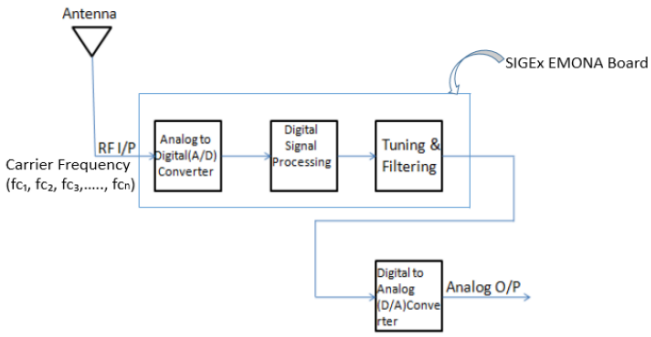

Figure1: Realization of Software Defined Radio receiver using NI-Elvis Emona Sigex board and Labview.

NI-Elvis with Emona sigex platform here used to perform the filtering and tuning using digital signal processing technique. Finally D/A converter and envelope detector extracts the information signal.

2.IIR Bandpass Tunable Filter

In this paper we introduce the analysis and design of infinite impulse response (IIR) digital filters that have the potential of sharp roll offs.

The generic format of transfer function of IIR filters is expressed as the ratio of two polynomials:

$$H(z)=\frac{\sum_{i=0}^{n} a_i z^{-i}}{1-\sum_{i=1}^{n} b_i z^{-i}}=\frac{a_0+a_1z^{-1}+a_2z^{-2}\ldots+a_nz^{-n}}{1-b_1z^{-1}-b_2z^{-2}-\cdots-b_nz^{-n}}=\frac{Y(z)}{X(z)}$$

Rearranging the terms gives,

$$Y(Z)=b_1Y(z)z^{-1}+\cdots+b_nY(z)z^{-n}+a_0X(z)+a_1X(z)z^{-1}+\cdots+a_nX(z)z^{-n}$$

The Y(z) terms on the right side of this equation are delayed feedback terms. Figure 5.1.1 shows these feedback terms as recursive loops; hence, these types of filters are also called recursive filters.

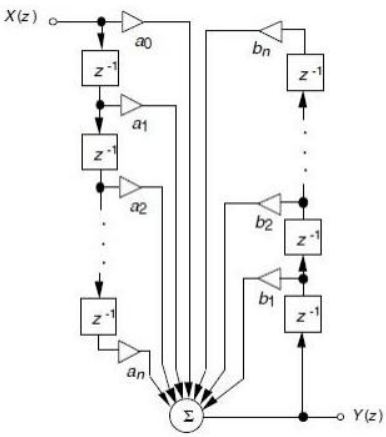

Figure 2: The Output of an IIR filter is delayed and feedback

In this paper, we have investigated more general digital filters that are characterized with both poles and zeros. These filters are known as *recursive* since they use feedback, and also as *Infinite Impulse Response (IIR)*. With feedback we will be able to realize much higher selectivity than possible with a comparable complexity FIR implementation. The most conspicuous example is the second-order resonator, which will open the way to achieving realistic bandpass responses.

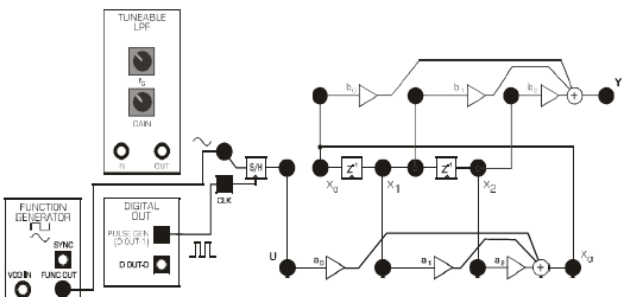

Figure 3:Realization of IIR filter using patching diagram

Figure 3 shows the design of IIR filter and its patching diagram using Emona sigex board.

3. Experimental Setup and Results

We have selected three carrier frequency(input frequency) as prototype to justify our proposed model for SDR receiver as shown in Table-1.

Table-1: Carrier frequency ranges for detection

Input Frequency	f1(Minimum)	Fc(Cut-off Freq.)	f2(Maximum)
16KHz	7KHz	16KHz	29KHz
22KHz	12KHz	22KHZ	32khZ
27KHz	14KHz	27KHz	49KHz

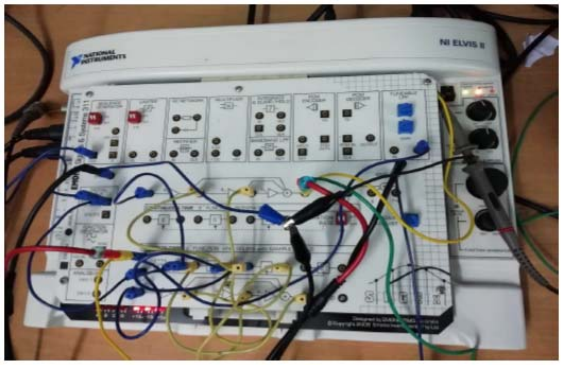

Figure 3: NI-Elvis and Emona Sigex board for SDR receiver development

Figure 3 shows the pictorial view of the development board for the implementation of SDR receiver system.
Let, we have to design bandpass filter having following specifications:
Sampling frequency – 85 KHz
Type-Chebyshev.
fpass1- 22000Hz
fpass2- 24000Hz
fstop1- 20000Hz
fstop2- 26000Hz
Ripple-4(Passband), 10(stopband)
Co-efficients are calculated and fed to the Labview environment , which is again uploaded to the Emona board as shown in Figure 4

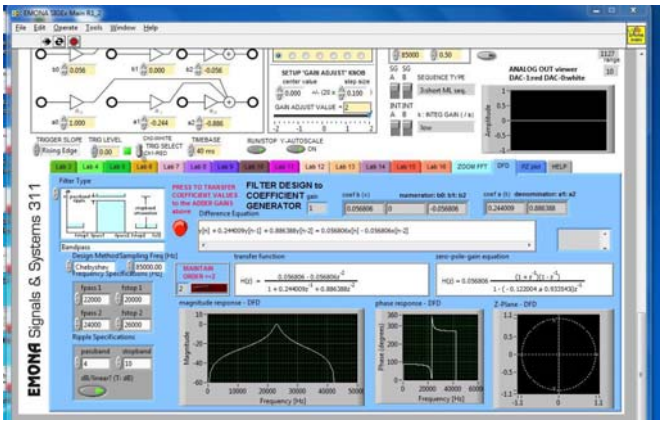

Figure 4: Setup for IIR filter design.

Results:
Figure 5 shows the CRO input and tuned output of 22KHz carrier modulated signal . Figure 6 shows spectrum of output signal.

Figure 5: CRO ouput waveform at 22 KHz

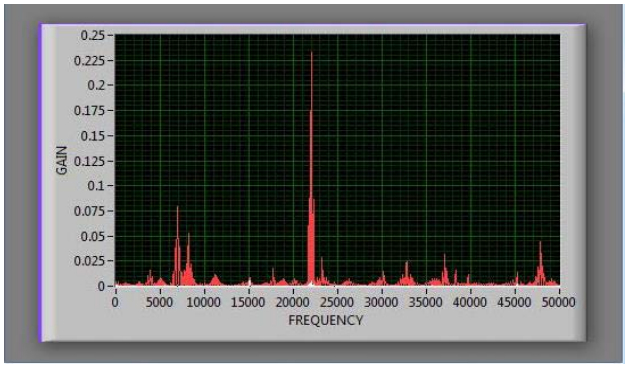

Figure 6: Spectrum of the output signal

4. Conclusion

The theoretical aspects of Software defined Radio receiver has beenimplemented using SIGEx Emona and Lab view environment. Thisexperimentation has established the basic conception of SDR by direct digital filtering of incoming carrier signals without much affecting thehardware as a receiver. Potentially this system can be upgraded to highfrequency wireless SDR system which in turn maybe the requirement of
5G Cognitive Radio (CR).

5. References

1. American Guild Of Town Criers Website, 1997 http://www.americantowncriers.com/.
2. IEEE Project 1900.1 - Standard Definitions and Concepts for Dynamic Spectrum Access: Terminology Relating to Emerging Wireless Networks, System Functionality,and Spectrum Management https://standards.ieee.org/develop/project/1900.1.html.
3. Analog Devices ADF7030 http://www.analog.com/ADF7030
4. Hall, B., and W. Taylor, X- and Ku-Band Small Form Factor Radio Design http://www. analog.com/en/technical-articles/x-and-ku-band-small-form-factorradio-design.html.
5. Xilinx Inc. www.xilinx.com 7 Series DSP48E1 User Guide, UG479 (v1.9)September 27, 2016 https://www.xilinx.com/support/documentation/user_guides/ug479_7Series_DSP48E1.pdf
6. Nivdea GPU-accelerated Libraries for Computing https://developer.nvidia.com/gpu-accelerated-libraries.
7.ARM NEON https://developer.arm.com/technologies/neon.
8. GNU Radio. Welcome to GNU Radio!. http://gnuradio.org/.
9.Reed, J. H., Software Radio: A Modern Approach to Radio Engineering,Upper Saddle River, NJ: Prentice Hall PTR, 2002.
10. Kensington, P., RF and Baseband Techniques for Software Defined Radio,Norwood, MA: Artech House, 2005.
11. Grayver, E., Implementing Software Defined Radio, New York: Springer-Verlag, 2012.